MP 180

FEATURES

- IN/OUT INTERCHANGEABLE
- LONG LIFE DIAPHRAGM
- BUILT-IN DIFFUSER
- SUITABLE FOR SUBMERSIBLE INSTALLATIONS
- MULTI-PURPOSE PUMP
- STURDY DESIGN

The PIUSI MP 180 is a long-lasting pneumatic diaphragm pump suitable for an heavy duty usage. Thanks to its carachteristics, this multi-purpose pump allows a range of wide installations including potentially explosive conditions.

MP 180

PERFORMANCE

UP TO 150 L/MIN FLOW RATE	MAX CAPACITY 5M SELF PRIMING
MAX 7 BAR AIR SUPPLY PRESSURE	MAX Ø 4MM PASSING SOLID

PACKAGING

CODE	WEIGHT		PACKAGING		
	KG	LBS	MM	INCH	PCS/BOX
F00208P30	7,5	16,5	270X390X400	10,6X15,4X15,7	1

CHART

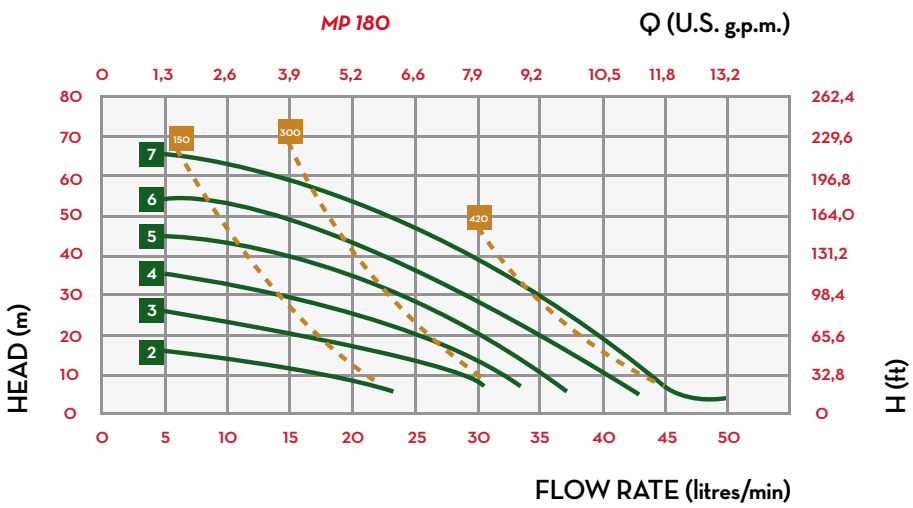

IN THE BOX

- MP 180 PUMP
- INSTRUCTION MANUAL

DETAILS

HEAVY DUTY MATERIALS

TECHNOPOLYMER BODY

STURDY DESIGN

DIMENSIONS

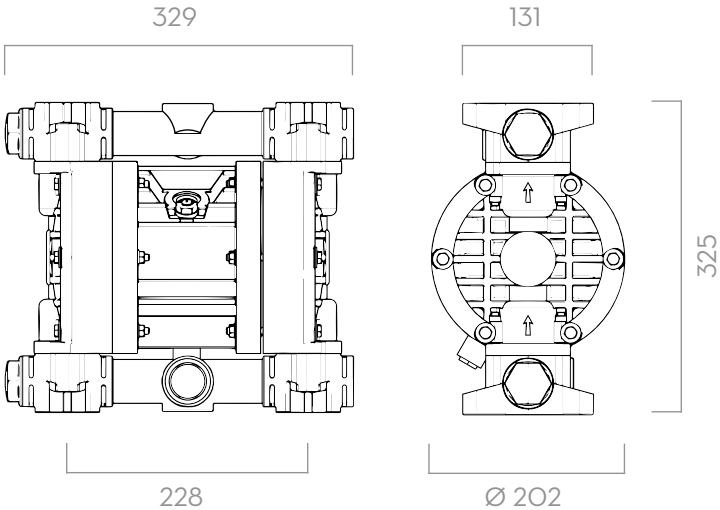

Dimensions expressed in millimeters

MATERIALS

- BODY: TECHNOPOLYMER
- SIDE PARTS AND COLLECTORS: POLYPROPYLENE
- DIAPHRAGM: EPDM

TECHNICAL DATA

CODE	DESCRIPTION	FLUIDS TYPE	PUMP BODY	IN / OUT	FLOW RATE	MEMBRANE TYPE	DIAPHRAGM AIR SIDE/ FLUID SIDE	BALLS	BALL SEATS*	O-RING*	INTAKE / DELIVERY CONNECTION	AIR CONNECTION	MAX SELF-PRIMING CAPACITY	MAX HEAD**	MAX AIR SUPPLY PRESSURE	MAX Ø OF PASSING SOLID
					L/MIN								M	M	BAR	MM
F00208P30	PIUSI MP 180	Ad W	POLYPROPYLENE	1" G	150	DOUBLE	PTFE/ HYTREL	PTFE	POLYPROPYLENE	PTFE	G 1" F	G 3/8" F	5	70	7	4

(*) ON REQUEST WE CAN PROVIDE MEMBRANES, BALLS, BALL SEATS AND O-RINGS IN DIFFERENT MATERIALS.
(**) THE VALUE DEPENDS ON THE CONFIGURATION OF THE PUMP

MP 180